Impulse handling with Netzer IO

Netzer is able to generate and capture signals at IO3 and SPI_INT.

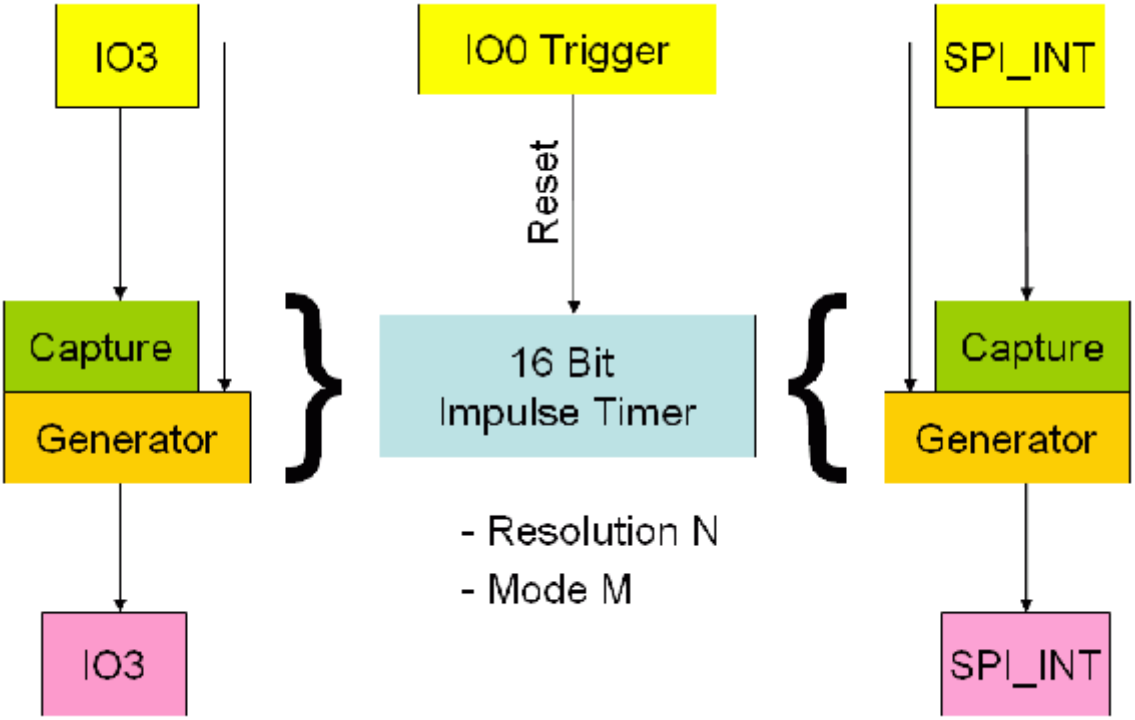

The image shows the structure of the impulse generator/capture.

From:
https://www.mobacon.de/dokuwiki/ - **MoBaCon**

Permanent link:
https://www.mobacon.de/dokuwiki/doku.php?id=en:netzer:impulse&rev=1408200061

Last update: **2025/06/11 20:42**